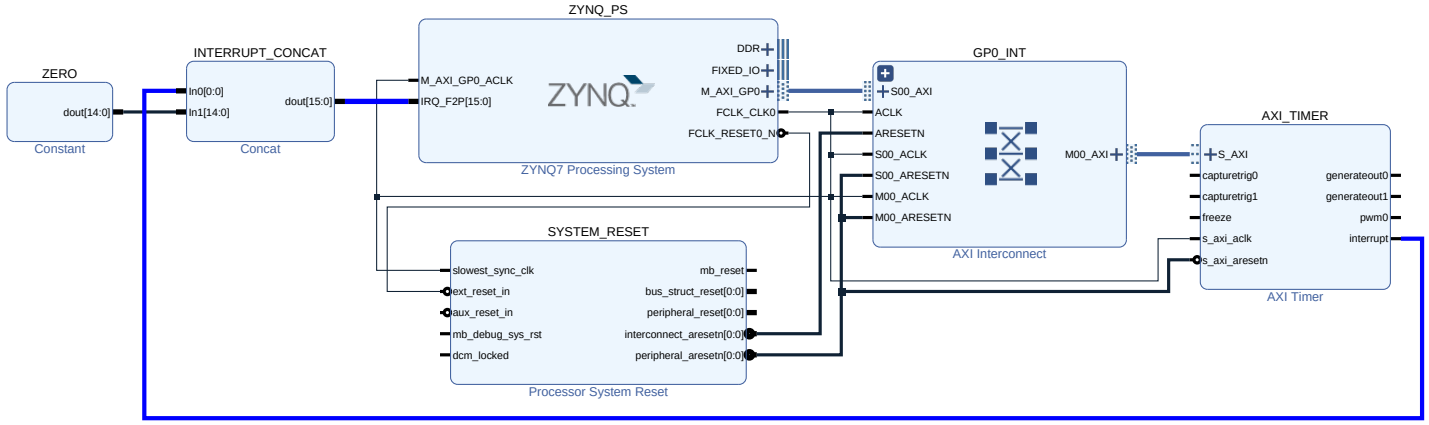
ZERO
dout[14:0]
Constant
INTERRUPT_CONCAT
In0[0:0]
In1[14:0]
dout[15:0]
Concat
ZYNQ_PS
M_AXI_GP0_ACLK
IRQ_F2P[15:0]
ZYNQ
DDR
FIXED_IO
M_AXI_GP0
FCLK_CLK0
FCLK_RESET0_N
ZYNQ7 Processing System
GP0_INT
S00_AXI
ACLK
ARESETN
S00_ACLK
S00_ARESETN
M00_ACLK
M00_ARESETN
M00_AXI
AXI Interconnect
AXI_TIMER
S_AXI
capturetrig0
capturetrig1
freeze
s_axi_aclk
s_axi_aresetn
generateout0
generateout1
pwm0
interrupt
AXI Timer
SYSTEM_RESET
slowest_sync_clk
ext_reset_in
aux_reset_in
mb_debug_sys_rst
dcm_locked
mb_reset
bus_struct_reset[0:0]
peripheral_reset[0:0]
interconnect_aresetn[0:0]
peripheral_aresetn[0:0]
Processor System Reset